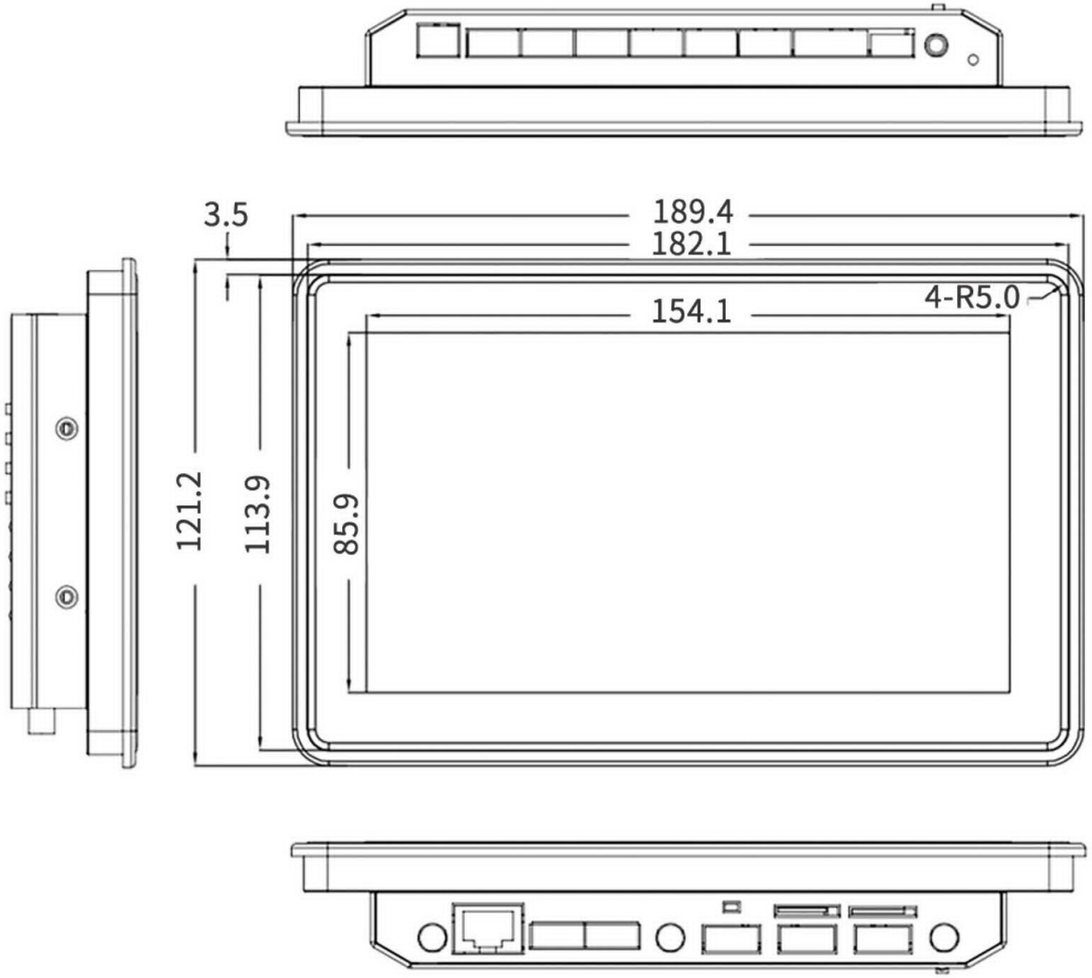
3.5
189.4
182.1
154.1
4-R5.0
121.2
113.9
85.9

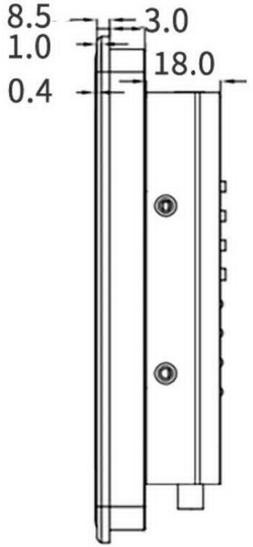
8.5
1.0
0.4
3.0
18.0

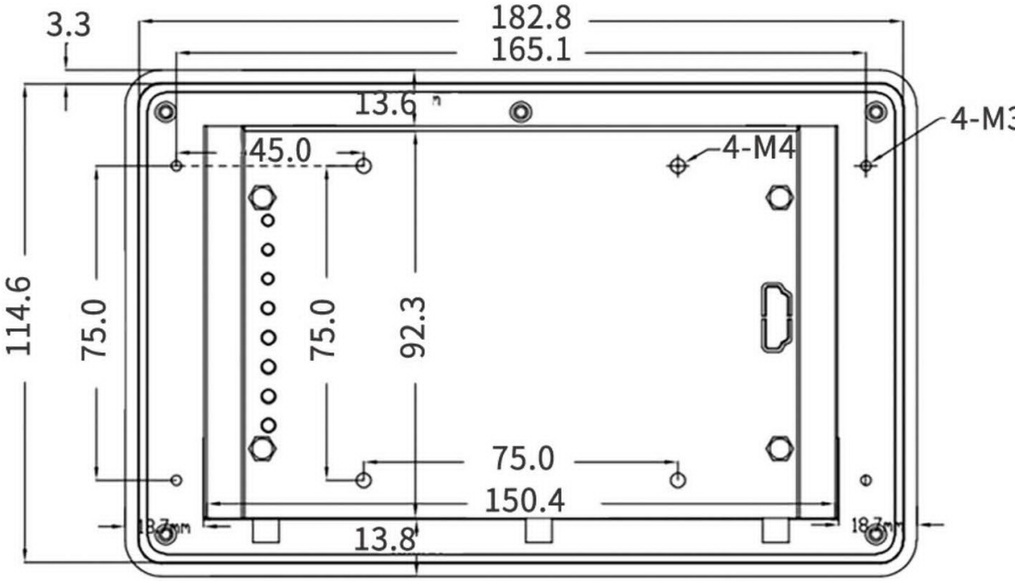
3.3
182.8
165.1
13.6
45.0
4-M4
4-M3
114.6
75.0
75.0
92.3
75.0
150.4
13.8